Ø140x100mm CA140-100T Series AC Centrifugal Blower

Specification:

Air Flow	215~ 250 CFM
Impeller	Die-cast Aluminum Housing Galvanised Sheet Steel Impeller
Motor	Capacitor-Run Induction and External Rotor Motor
Rotor	Black Paint
Bearing	Dual Ball Bearing, Permanently Lubricated
Operating Voltage Range	85VAC to 125VAC for 115V Type
	185VAC to 245 VAC for 230V Type
Lead Wire	AWG# 20 UL
Insulation	Class "B" or "F"
Safety	Thermally Protected (Auto Restart)
Operating Temperature	2C→ -20°C to +50°C; 3C→ -20°C to +60°C
Weight	2C→3000g; 3C→2580g

Item Code	Rated Voltage	Frequency (Hz)	Rated Current(A)	Input Power(W)	Speed (RPM)	Air Flow (CFM)	Air Flow (m^3/min)	Static Pressure (inch-H_2O)	Noise dB(A)	Capacitor (μF)
CA1V140-100T-FMG-B38-2C	115V	50/60	1.06/1.23	124/144	1800/1650	250/230	7.08/6.51	1.58/2.08	64/62	12μF 200VAC
CA2V140-100T-FMG-B38-2C	230V	50/60	0.54/0.63	124/144	1800/1650	250/230	7.08/6.51	1.58/2.08	64/62	3μF 400VAC
CA1V140-100T-FMG-B38-3C	115V	50/60	0.88/0.99	101/113	1500/1400	230/215	6.51/6.09	1.51/2.03	60/58	10μF 200VAC
CA2V140-100T-FMG-B38-3C	230V	50/60	0.44/0.50	101/113	1500/1400	230/215	6.51/6.09	1.51/2.03	60/58	2.5μF 400VAC

CE

Outline Drawing:

Unit:mm(Inch)

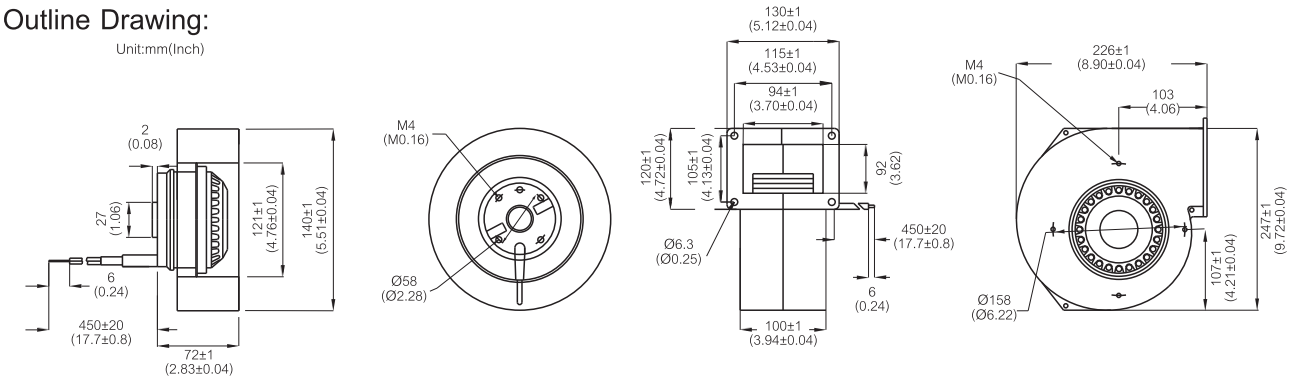
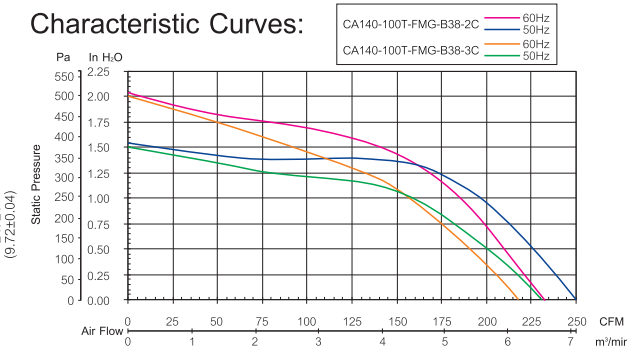
Characteristic Curves: